Chronic Leukemias

Dr Feras Fararjeh
Board-certified Hematologist and Medical Oncologist
Assistant Professor at University of Jordan, Amman | UJ

CLL/SLL: Background

- Most common leukemia in west (30% of adult leukemia)
- More than 21,000 estimated new cases in 2021 in the United States[1,2]
  - 7% of all NHL are CLL/SLL
- Median age at diagnosis: 70 yrs[2]
- SLL and CLL considered the same B-cell malignancy[3]
  - CLL: ≥ 5000 clonal lymphocytes in peripheral blood
  - SLL: presence of lymphadenopathy and/or splenomegaly and < 5000 clonal lymphocytes in peripheral blood
- Modern 5-yr survival: 87.2%[2]

1. Siegel. CA Cancer J Clin. 2021;71:7. 2. SEER Cancer Stat Facts. Chronic lymphocytic leukemia.
3. Zelenetz. J Natl Compr Canc Netw. 2015;13:326.

Introduction

- Asymptomatic/incidental/indolent
- Enlarged lymph nodes
- Marrow impairment (anemia, low plt, infections)
- Hypogammaglobulinemia
- Autoimmune phenomena (AIHA, PRCA, ITP, Granulocytopenia…)
- Richter’s transformation

Burger et al. NEJM. 2020

Diagnosis of CLL

- Lymphocytosis (small, mature lymphocytes ≥5000/μL)
- Bone marrow involvement of ≥30% lymphocytes
- ≤55% atypical/immature lymphoid cells in peripheral blood
- Clonal expansion of abnormal B lymphocytes
  - Low density of surface Ig (IgM or IgD) with κ or λ light chains
  - B-cell surface antigens (CD19, CD20, CD23); CD20 dim
  - CD5 surface antigen

Immunophenotypic Differentiation of B-CLL From Other Chronic Lymphoproliferative Disorders

Antigen/Marker	CLL	MCL	SLVL	B-PLL
sIg intensity	Weak	Strong	Strong	Strong
CD19/CD20	+	+	+	+
CD5	+	+	V	-
CD23	+	-	V	V
CD11c	V	-	V	-
FMC7	V	+	+	+
CD79b	-	+	V	+
CD22	-	V	+	-

Differential Diagnosis

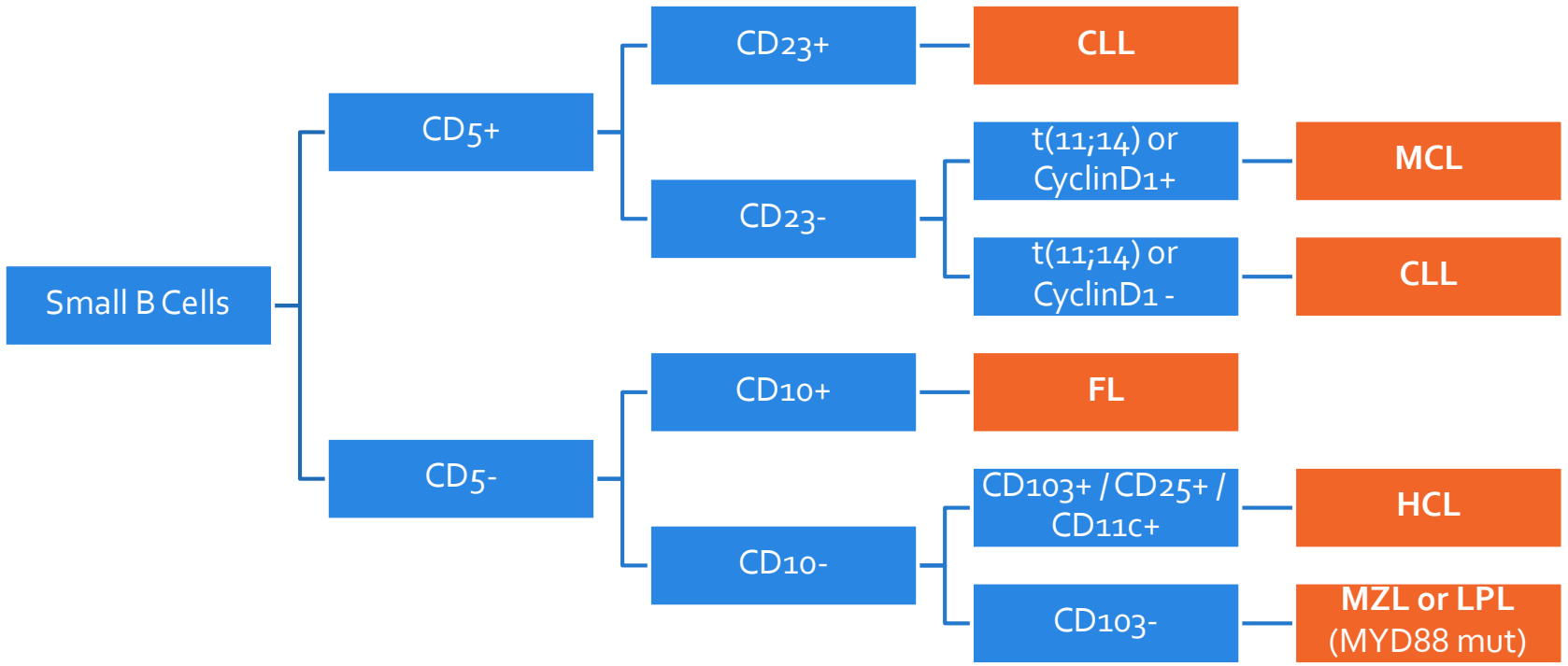

Adapted from NCCN Guidelines Version 4.2020 B-Cell Lymphomas

Memorial Sloan Kettering Cancer Center

Clinical Course of CLL

- Asymptomatic at diagnosis and for prolonged periods
- Diagnosis often incidental
- Initial symptoms: lymph node ↑/anemia
- Progression: bone marrow impairment, ↑ susceptibility to infection
- Hypogammaglobulinemia ↑ with advanced disease
- Long-term complications: autoimmune phenomena, Richter's transformation

The Rai System for Clinical Staging of CLL

Stage	3-Stage System	Features	Median Survival(y)
0	Low risk	Lymphocytosis	>10
I	Intermediate risk	Lymphadenopathy	7
II		Splenomegaly ± hepatomegaly	
III	High risk	Anemia	2-5
IV		Thrombocytopenia	

Rai et al. Blood. 1975;46:219-234.

SURVIVAL UNTREATED CLL BY RAI STAGE

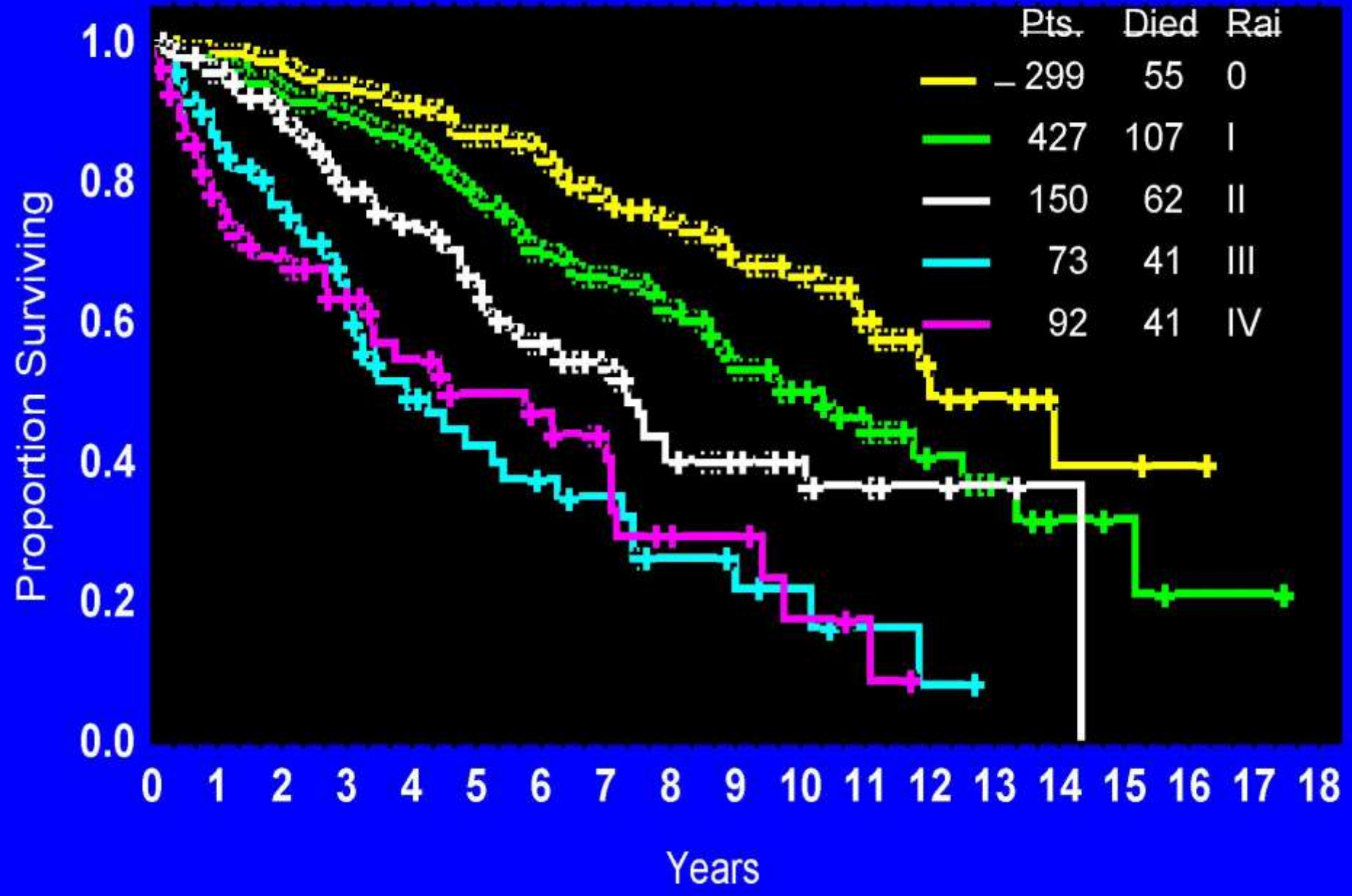

Genomic Aberrations In CLL
Interphase FISH Results
82% Abnormal

Abnormality	No. Patients (%)	
13q deletion	178	(55)
11q deletion	58	(18)
trisomy 12	53	(16)
17p deletion	23	(7)
6q deletion	21	(6)

Dohner et al. N Engl J Med. 2000; 343:1910-1916.

Probability of Survival

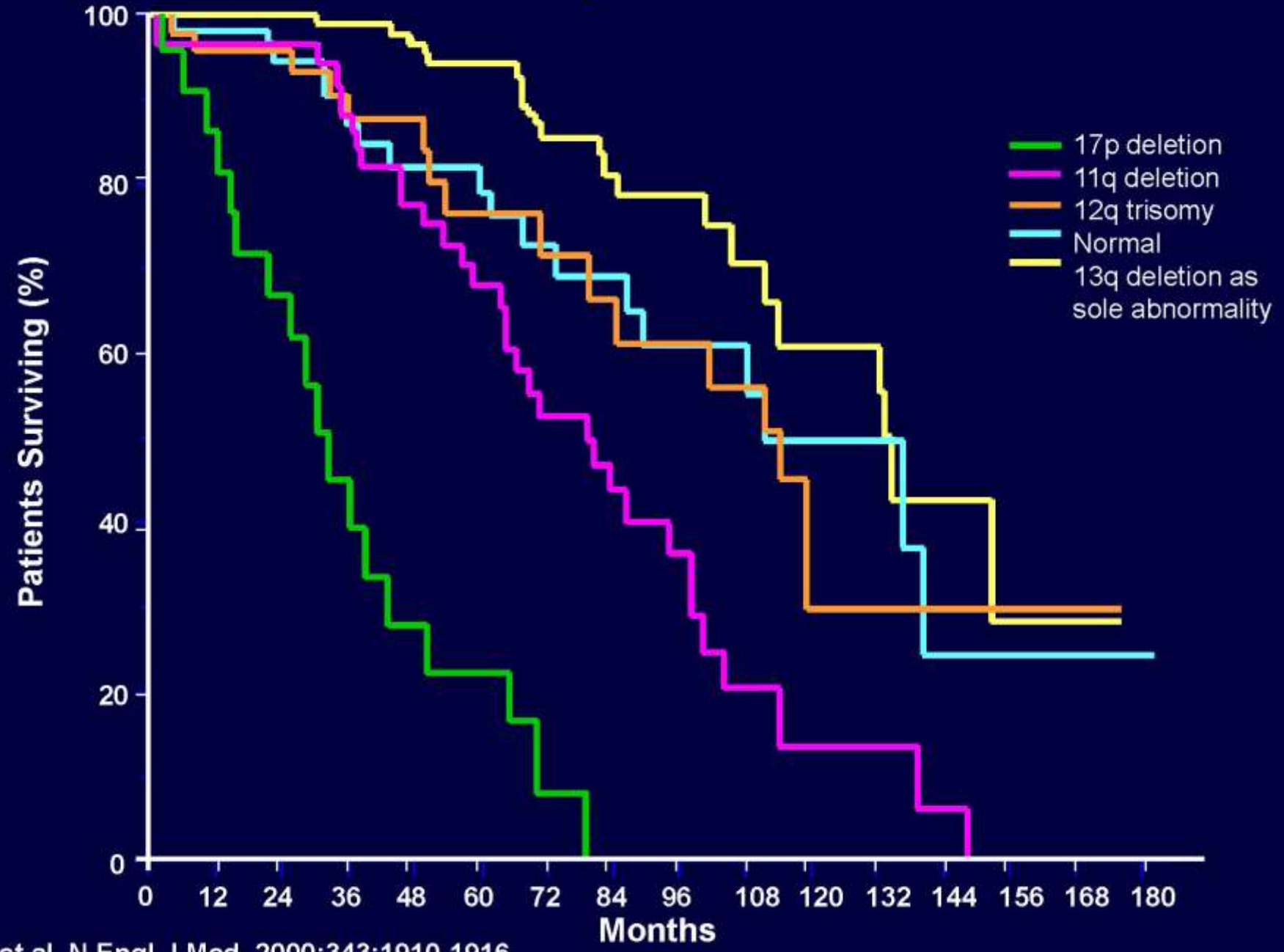

Dohner et al. N Engl J Med. 2000;343:1910-1916.

IWCLL-NCI: Indications to Initiate Treatment for CLL

- Constitutional symptoms referable to CLL
- Progressive marrow failure
- Autoimmune anemia +/- thrombocytopenia poorly responsive to steroids or other
- Massive (>6 cm) or progressive splenomegaly
- Massive (>10 cm) or progressive lymphadenopathy
- Symptomatic extranodal involvement (eg. skin, kidney, lung, spine)
- Progressive lymphocytosis, >50% increase over 2 months or LDT < 6 months.

Hallek et al. Blood. 2018 June 21;131(25);2745-2760.

Why Not Treat CLL at Diagnosis

- Indolent disease
- Patients often asymptomatic
- Median age early 70's
- No cure

Evaluation Prior to Treatment

- Detailed examination and labs
- Repeat FISH to check for del 17p
- No need to repeat IGHV
- Somatic mutation testing for *TP53*
- Bone marrow biopsy and aspirate
- CT scan to evaluate abdominal adenopathy
- Hepatitis B and C testing especially with planned anti-CD20 antibody

Memorial Sloan Kettering Cancer Center

Ibrutinib in Refractory CLL With 11q Deletion



Chronic Myeloid Leukemia (CML) — Definition & Phases

- **Definition**
  - BCR::ABL1-positive MPN with uncontrolled granulocytic proliferation
  - Phases: chronic phase (CP) → accelerated phase (AP) → blast crisis (BC)
  - Most present in CP with leukocytosis, basophilia, and splenomegaly

CML — Pathophysiology

- BCR::ABL1 fusion protein: constitutive tyrosine kinase activity → downstream PI3K/AKT, RAS/MAPK, JAK/STAT
- Philadelphia chromosome t(9;22)(q34;q11); p210 most common (e13a2/e14a2 transcripts)
- Tyrosine kinase inhibitors (TKIs) target ATP-binding site; resistance via kinase domain mutations or amplification

CML — Presentation

- Fatigue, weight loss, night sweats, abdominal fullness (splenomegaly)
- CBC: marked leukocytosis with left shift; basophilia; thrombocytosis or thrombocytopenia
- Hyperuricemia; Gout

CML — Diagnosis (Approach)

- Confirm BCR::ABL1 by RT-qPCR (IS), FISH, or karyotype; exclude BCR::ABL1-negative MPNs
- Assess phase (CP/AP/BC) based on blasts, basophils, platelets, cytogenetics
- Baseline risk scores

CML — Treatment & Monitoring

- First-line TKIs: imatinib, dasatinib, nilotinib, bosutinib; special cases: asciminib after ≥2 TKIs or intolerance
- Response milestones (IS % BCR::ABL1): ≤10% at 3 months, ≤1% at 6 months, ≤0.1% (MMR) at 12 months
- Failure/resistance → assess adherence, drug interactions; perform mutation analysis; switch TKI accordingly
- Treatment-free remission (TFR) possible after sustained deep response (MR4/4.5) with close monitoring

Case 1 — 58-year-old with Platelets 980 ×10^9/L

Presentation

- Symptoms: headaches, burning feet; no bleeding
- Labs: Hb 13.8, WBC 9.5; ferritin normal
- JAK2 V617F positive; marrow: large hyperlobulated megakaryocytes

Interpretation & Plan

- Dx: Essential thrombocythemia
- Tx: ASA. cytoreduction (HU) due to age ≥60
- Counsel re: thrombosis risk

Case 2 — 45-year-old lady with Hct 55%

Key Points

Symptoms: pruritus; splenomegaly
Labs: low EPO; JAK2 V617F positive
Marrow: panmyelosis

Interpretation & Plan

Dx: Polycythemia vera
Tx: Phlebotomy to Hct ≤45% + ASA;
Control CV risks

Case 3 — 39-year-old with WBC 120 ×10^9/L and Basophilia

Key Points

Symptoms: fatigue, early satiety; spleen palpable
FISH: BCR::ABL1 positive; PCR IS 45%
Karyotype: t(9;22)

Interpretation & Plan

Dx: Chronic phase CML
Tx: Start TKI (e.g., imatinib/dasatinib/nilotinib)
Monitor PCR at 3, 6, 12 months to meet milestones